Strainer waste with control handle - Platinum

LOT

10 711 970

- control for single basin
- including adapter for Bowden cable

Not compatible with brushed stainless steel kitchen sinks 38 XXX 004-86.

Fits LOT

Platinum	10 711 970-08
Chrome	10 711 970-00
Brushed Platinum	10 711 970-06
Durabrass (23kt Gold)	10 711 970-09
Dark Chrome	10 711 970-19
Brushed Durabrass (23kt Gold)	10 711 970-28
Matte Black	10 711 970-33
Brushed Champagne (22kt Gold)	10 711 970-46
Champagne (22kt Gold)	10 711 970-47
Brushed Chrome	10 711 970-93
Brushed Dark Platinum	10 711 970-99

We reserve the right to change designs, product range and technical specifications without prior notice.
More information can be found at: www.dornbracht.com +49 (0) 2371 8899 900 mail@dornbracht.com

Strainer waste with control handle - Platinum

LOT

10 711 970

mm [inches]

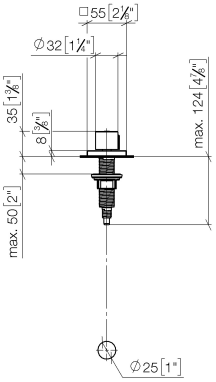

Strainer waste with control handle - Platinum

LOT

10 711 970

Parts for other finishes can be found here: Chrome

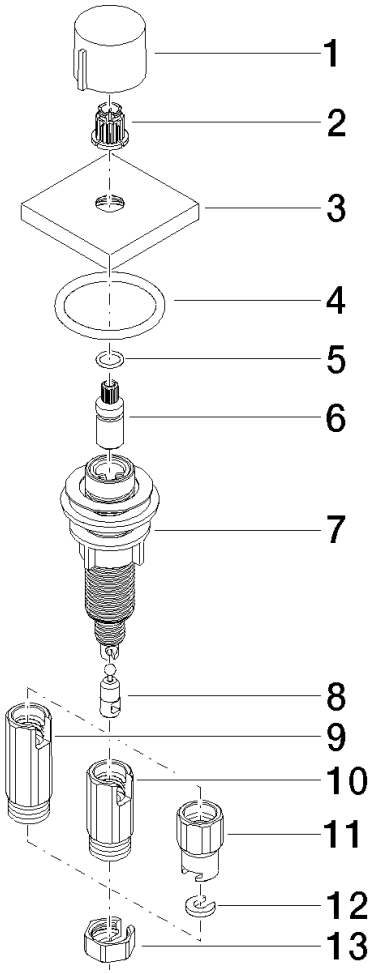

Spare parts list

No.	Item Number	Name	Quantity used	Delivery time
1	09 20 97 030-08	handle	1	40
2	90 12 12 002 00 90	fixing cap	1	2
3	09 27 87 007-08	rosette	1	40
4	90 14 10 043 00 90	seal	1	2
5	09 14 10 042 90	seal	1	2
6	09 29 06 087-08	spindle	1	-
	Spare part can no longer be ordered, please order the replacement item			
7	04 30 01 029 00 90	adaptor	1	2
8	09 24 03 175 90	adaptor	1	2
9	09 11 10 073-07	connection	1	30
10	09 11 10 074-07	connection	1	30
11	09 11 10 079-07	connection	1	30
12	09 30 11 087 90	disc	1	2
13	09 23 30 024-07	nut	1	30

We reserve the right to change designs, product range and technical specifications without prior notice.
More information can be found at: www.dornbracht.com +49 (0) 2371 8899 900 mail@dornbracht.com